O-rings selection and verification

COPY COMPLIANT to the original document resident on the computer system at the time of printing

Index

1. Purpose 4
2. Abbreviations 4
3. Scope 5
4. Basic knowledge: O-ring sealing principles 5
5. Material selection guide 7
5.1. Acrylonitrile-Butadiene (NBR) 7
5.2. Carboxylated Nitrile (XNBR) 7
5.3. Ethylene Propylene Rubber (EPR, EPDM) 7
5.4. Silicone (Q, MQ, VMQ, PVMQ) 7
5.5. Hydrogenated Nitrile (HNBR, HSN) 8
5.6. Fluorocarbon (FKM) 8
5.7. Fluorosilicone (FVMQ) 8
5.8. Tetrafluoroethylene-Propylene (AFLAS) 8
5.9. Perfluoroelastomer (FFKM) 8
5.10. Chloroprene Rubber (CR) 9
5.11. Butyl Rubber (IIR) 9
5.12. Ethylene Acrylate (AEM, Vamac) 9
5.13. Polyacrylate (ACM) 9
5.14. Polyurethane (AU, EU) 9
6. O-ring selection and gland design 10
7. Causes of leaks 14
8. Signs of damage 14
9. Extrusion 16
10. Compression set 19
11. High temperature limit effect 20

COPY COMPLIANT to the original document resident on the computer system at the time of printing

12. Acceptance criteria 22

12.1. Piston seal (low pressure)..... 22

12.2. Rod seal (low pressure) 23

12.3. Axial seal (low pressure)..... 24

12.1. Piston, rod, axial seal (high pressure) 25

13. References 26

14. Annex A: Block diagram..... 27

15. Annex B: O-ring selector (piston seal)..... 28

16. Annex C: O-ring selector (rod seal)..... 29

17. Annex D: O-ring selector (axial seal)..... 30

18. Annex E: Case study 31

18.1. Introduction..... 31

18.1. Numerical results 32

18.2. Experimental test 34

18.3. Conclusions 35

COPY COMPLIANT to the original document resident on the computer system at the time of printing

1. Purpose

This document defines the guidelines to for the selection and the verification of O-rings type gasket.

2. Abbreviations

b	gland width
C	compression set (as percent of original deflection)
c_{diam}	total diametral clearance
c_h	calculated clearance at O-ring location in hydrotest condition
c_{op}	calculated clearance at O-ring location in operating condition
d_1	O-ring internal diameter
d_2	O-ring cross-section diameter
h	gland depth (axial seal)
$F_{assemby}$	compressive force on the O-ring during the assembling phase
$F_{compression}$	force required by the O-ring to be adequately compressed
FS	factor of safety
p	hydraulic pressure
s	design clearance between piston and cylinder or between flanges for axial seal
t	gland depth (piston and road seal)
t_0	original thickness
t_i	recovered thickness
t_s	seating thickness
V_{gland}	volume of the gland
$V_{O\text{-}ring}$	volume of the deformed O-ring (after assembling)

COPY COMPLIANT to the original document resident on the computer system at the time of printing

3. Scope

This procedure is applicable to all pressure components that requires O-rings to guarantee the absence of leakage.

4. Basic knowledge: O-ring sealing principles

When the O-ring is fitted into the groove, the O-ring is squeezed since the depth of the groove is less than the thickness of the O-ring (thickness of the O-ring minus the depth of the groove). This amount of compression is called the squeeze margin. At low pressure, as shown in Figure 1, the sealing action is performed by the rubber elasticity of the O-ring itself. When hydraulic pressure is applied from one side, a reaction force higher than the hydraulic load pressure is generated as shown in Figure 2. This is called the *self-sealing action* of the O-ring.

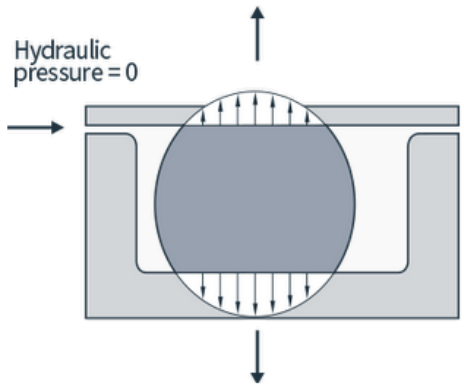

Figure 1 Reaction forces at installation.

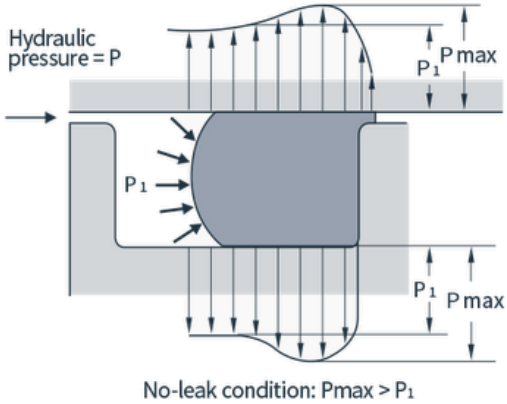

Figure 2 Reaction forces at hydraulic load.

O-ring has wide range of applications, both static and dynamic. This procedure is mainly related to static functions.

In static conditions the O-ring compression is higher than in dynamic applications. The requirements at the sealing surfaces are different, i.e. coarser machining can be accepted. In general, a seal with the largest possible cross-section should be chosen. Larger cross-sectional diameters are subject to greater compression and in percentage terms their tolerance deviations are smaller.

In dynamic applications the compression of the O-Ring is lower than in static applications. The contact surface must have a smoother finish to keep abrasion resistance and wear within limits.

In contrast with static applications, the deformation of the O-Ring cross-section is kept lower to minimize friction, wear and temperature rise. The minimum compression necessary depends on the

COPY COMPLIANT to the original document resident on the computer system at the time of printing

application (hydraulics or pneumatics) while the maximum compression is governed by the requirement for durability. For special applications, lubrication of gasket is adopted to reduce friction.

The most common configurations or installations are shown in Table 1.

Table 1 O-ring configuration.

Radial	
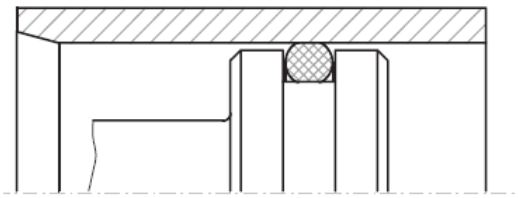 Piston seal	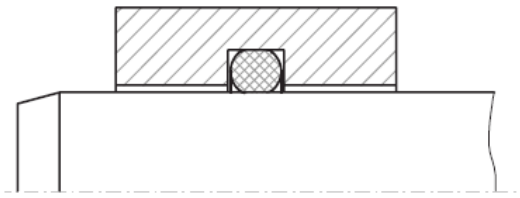 Rod seal
Axial	
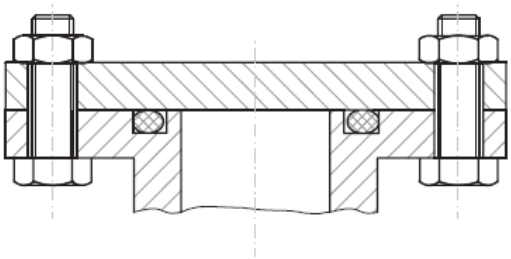 Internal/external pressure	

COPY COMPLIANT to the original document resident on the computer system at the time of printing

5. Material selection guide

This paragraph provides a brief review of the various elastomers currently available.

5.1. Acrylonitrile-Butadiene (NBR)

Nitrile rubber (NBR) is the general term for acrylonitrile butadiene copolymer. The acrylonitrile content of nitrile sealing compounds varies considerably (18% to 50%) and influences the physical properties of the finished material. The acrylonitrile content offers better resistance to oil and fuel, however, the elasticity and resistance to compression set is adversely affected. On the other hand, lower acrylonitrile content offers better low temperature performance but decreases resistance to oil and fuel. In view of these opposing realities, a compromise is often drawn and a copolymer with a medium acrylonitrile content is selected.

NBR has good mechanical properties when compared with other elastomers and high wear resistance. NBR is not resistant to weathering and ozone.

5.2. Carboxylated Nitrile (XNBR)

Carboxylated Nitrile (XNBR) is a special type of nitrile polymer that exhibits enhanced tear and abrasion resistance. For this reason, XNBR based materials are often specified for dynamic applications such as rod seals and rod wipers.

5.3. Ethylene Propylene Rubber (EPR, EPDM)

EPR copolymer ethylene propylene and ethylene-propylenediene rubber (EPDM) terpolymer are particularly useful when sealing phosphate-ester hydraulic fluids and in brake systems that use fluids having a glycol base.

5.4. Silicone (Q, MQ, VMQ, PVMQ)

Silicones have good ozone and weather resistance as well as good insulating and physiologically neutral properties. However, silicone elastomers as a group, have relatively low tensile strength, poor tear strength and little wear resistance.

COPY COMPLIANT to the original document resident on the computer system at the time of printing

5.5. Hydrogenated Nitrile (HNBR, HSN)

Hydrogenated Nitrile (HNBR) is a synthetic polymer that results from the hydrogenation of nitrile rubber (NBR). Superior mechanical characteristics, particularly high strength, helps reduce extrusion and wear.

5.6. Fluorocarbon (FKM)

Fluorocarbon (FKM) has excellent resistance to high temperatures, ozone, oxygen, mineral oil, synthetic hydraulic fluids, fuels, aromatics and many organic solvents and chemicals. Low temperature resistance is normally not favourable and for static applications is limited to approximately -26°C (-15°F) although certain compounds are suitable down to -54°C (-65°F). Under dynamic conditions, the lowest service temperature is between -15°C and -18°C (5°F and 0°F).

Gas permeability is very low and similar to that of butyl rubber. Special FKM compounds exhibit an improved resistance to acids and fuels.

5.7. Fluorosilicone (FVMQ)

Fluorosilicone (FVMQ) contains trifluoropropyl groups next to the methyl groups. The mechanical and physical properties are very similar to VMQ. However, FVMQ offers improved fuel and mineral oil resistance but poor hot air resistance when compared with VMQ.

5.8. Tetrafluoroethylene-Propylene (AFLAS)

This elastomer is a copolymer of tetrafluoroethylene (TFE) and propylene. Its chemical resistance is excellent across a wide range of aggressive media.

5.9. Perfluoroelastomer (FFKM)

Perfluoroelastomers (FFKM) currently offer the highest operating temperature range, the most comprehensive chemical compatibility, and the lowest off-gassing and extractable levels of any rubber material. Parker's proprietary formulations deliver an extreme performance spectrum that make them ideal for use in critical applications like semiconductor chip manufacturing, jet engines and chemical processing equipment.

COPY COMPLIANT to the original document resident on the computer system at the time of printing

5.10. Chloroprene Rubber (CR)

Chloroprene was the first synthetic rubber developed commercially and exhibits generally good ozone, aging and chemical resistance. It has good mechanical properties over a wide temperature range.

5.11. Butyl Rubber (IIR)

Butyl (isobutylene, isoprene rubber, IIR) has a very low permeability rate and good electrical properties.

5.12. Ethylene Acrylate (AEM, Vamac)

Ethylene acrylate is a terpolymer of ethylene and methyl acrylate with the addition of a small amount of carboxylated curing monomer. Ethylene acrylate rubber is not to be confused with polyacrylate rubber (ACM).

5.13. Polyacrylate (ACM)

ACM (acrylic rubber) has good resistance to mineral oil, oxygen and ozone. Water compatibility and cold flexibility of ACM are significantly worse than with nitrile.

5.14. Polyurethane (AU, EU)

Polyurethane elastomers, as a class, have excellent wear resistance, high tensile strength and high elasticity in comparison with any other elastomers. Permeability is good and comparable with butyl.

COPY COMPLIANT to the original document resident on the computer system at the time of printing

6. O-ring selection and gland design

The correct O-ring selection and gland dimensioning is based on several parameters that should be taken in account during design phase.

After the definition of the O-ring configuration (Table 1), the polymer compound should be selected, based on the fluid compatibility and temperature range; material choice forces the gasket thermal expansion coefficient and swelling characteristics.

In addition to previous design parameter, maximum operating pressure and seal shore hardness must be specified.

Finally, after the selection of O-ring dimension (i.e., cross section diameter d_1 and inner diameter d_2) the gland design should be determined. Guiding principia for radial and axial configurations are slightly different (Table 2).

COPY COMPLIANT to the original document resident on the computer system at the time of printing

Table 2 O-ring and gland dimensioning.

Piston seal	Dimensioning criteria
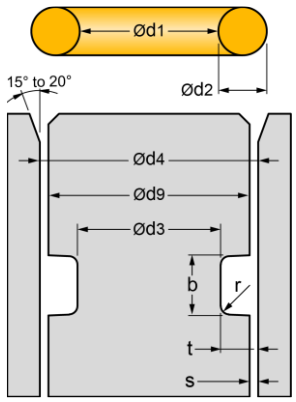	**t + s (gland depth + gap).** t + s defines the compression of the seal. Thermal expansion and swelling must be considered. Recommended: O-ring d_1 and d_2 function. **s (gap)** gap must be kept small to prevent extrusion and severe eccentricity. Thermal expansion and swelling must be considered. Recommended: O-ring d_1 and d_2 function. **Stretch of O-ring inner diameter** Stretch is considered in mounting conditions Too much stretch can damage the seal, too little can lead to mounting failure. Recommended: 0% - 6% **Compression of O-ring cross section diameter** Too much compression can damage the seal, too little can cause leakage (thermal expansion of both gland and O-ring should be included, plus gasket swelling and reduction of section due to stretch). Recommended: 12% - 28% **Gland fill** Too high gland fill can cause seal damage, too little can allow the seal to move (thermal expansion of both gland and O-ring should be included, plus gasket swelling). Recommended: 60% - 90% **Total deformation force** Compression and shore hardness determine the required O-ring forces. The assembly design should be capable of reach this level of stress. **Extrusion** Operating pressure and clearance gap can generate extrusion in the O-ring. Special calculations are required to avoid this failure.

COPY COMPLIANT to the original document resident on the computer system at the time of printing

Rod seal	Dimensioning criteria
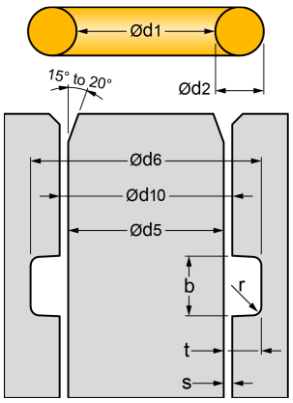	**t + s (gland depth + gap).** t + s defines the compression of the seal. Thermal expansion and swelling must be considered. Recommended: O-ring d_1 and d_2 function. **s (gap)** gap must be kept small to prevent extrusion and severe eccentricity. Thermal expansion and swelling must be considered. Recommended: O-ring d_1 and d_2 function. **Interference of O-ring outer ring.** Interference is considered in mounting conditions (i.e., room temperature): high values can cause mounting failures, too little values allow the seal to move during pressure application. Recommended: 0% - 3% **Stretch of O-ring inner diameter** Stretch is considered in mounting conditions Too much stretch can damage the seal, too little can lead to mounting failure. Recommended: 0% - 6% **Compression of O-ring cross section diameter** Too much compression can damage the seal, too little can cause leakage (thermal expansion of both gland and O-ring should be included, plus gasket swelling and reduction of section due to stretch). Recommended: 12% - 28% **Gland fill** Too high gland fill can cause seal damage, too little can allow the seal to move (thermal expansion of both gland and O-ring should be included, plus gasket swelling). Recommended: 60% - 90% **Total deformation force** Compression and shore hardness determine the required O-ring forces. The assembly design should be capable of reach this level of stress. **Extrusion** Operating pressure and clearance gap can generate extrusion in the O-ring. Special calculations are required to avoid this failure.

COPY COMPLIANT to the original document resident on the computer system at the time of printing

Axial seal	Dimensioning criteria
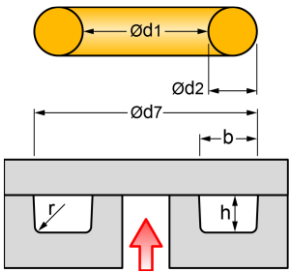 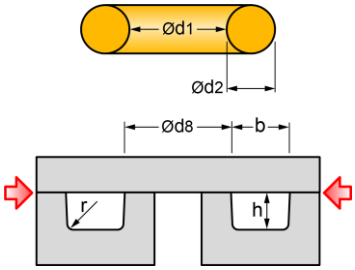	**Interference of O-ring outer ring.** Interference is considered in mounting conditions (i.e., room temperature): high values can cause mounting failures, too little values allow the seal to move during pressure application. Recommended: 0% - 3% **Compression of O-ring cross section diameter** Too much compression can damage the seal, too little can cause leakage (thermal expansion of both gland and O-ring should be included, plus gasket swelling). Recommended: 15% - 23% **Gland fill** Too high gland fill can cause seal damage, too little can allow the seal to move (thermal expansion of both gland and O-ring should be included, plus gasket swelling). Recommended: 60% - 90% **Total deformation force** Compression and shore hardness determine the required O-ring forces. The assembly design should be capable of reach this level of stress. **Extrusion** Operating pressure and clearance gap can generate extrusion in the O-ring. Special calculations are required to avoid this failure.

O-ring calculators are available from several manufacturers (the first one is recommended):

- Parker, https://divapps.parker.com/divapps/oring/ORingSelector
- Eriks, https://oringcalculator.eriksgroup.com/
- Freudberg, https://oring.fst.com/ORingConfigurator/

COPY COMPLIANT to the original document resident on the computer system at the time of printing

7. Causes of leaks

There are various reasons why leaks can occur in your application., but it is possible to traced back three common causes:

- the incorrect dimensioning of the O-ring combined with the groove dimensions;
- the excessive stretching or compression of the O-ring, this can cause the internal and external diameters of the O-ring to change, and the O-ring may no longer fit correctly;
- the incorrect choice of material or compound for your application (this can damage the O-ring and cause the seal to fail).

8. Signs of damage

Most common signs of damage are summarized in Table 3.

Table 3 Damage.

Extrusion Extrusion is a phenomenon that occurs mainly in high-pressure applications. This is where the O-ring is trapped between the clearance gap and becomes "nibbled". The reason for this may be too wide a clearance gap or too high an operating pressure.	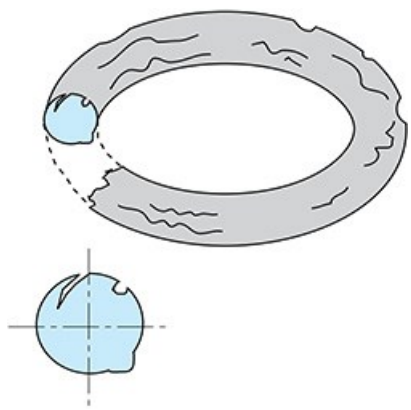
Twisting In a dynamic application, an O-ring may start to rotate. This can cause the O-ring to twist and become damaged. This damage can be caused by a lack of lubrication, too high a compression or incorrect grooving.	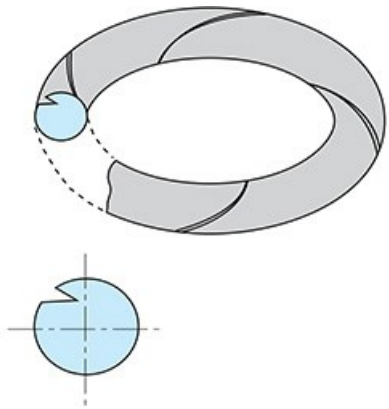

COPY COMPLIANT to the original document resident on the computer system at the time of printing

Compression set The compression set is the degree of permanent deformation after the compression of an O-ring. If the load or deformation disappears, the material will return to its original form with a certain degree of permanent deformation. This is called the compression set. It is possible for the compression set of an O-ring to be high that it is no longer able to return to its original form. This can result in leakage.	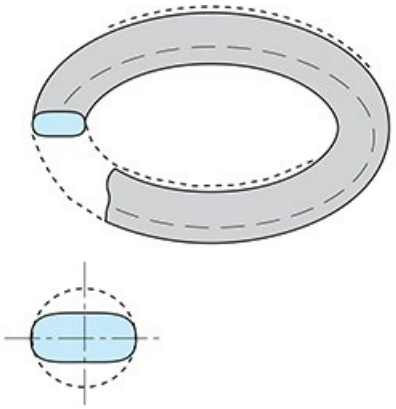
Effect of ozone If the O-ring in your application has long-term exposure to direct sunlight, accelerated ageing may occur. Hairline cracks can arise, which are easily visible when the O-ring is stretched. The cracks are always perpendicular to the direction of tension.	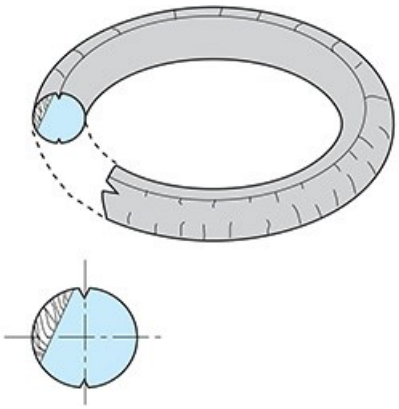
Overheating If the O-ring in your application must be resistant to high temperatures, it is very important to also select a compound based on this. Every rubber compound has its own temperature range. If the working temperature is higher than the maximum temperature of the O-ring, hardening may occur and the O-ring will exhibit cracks in all directions	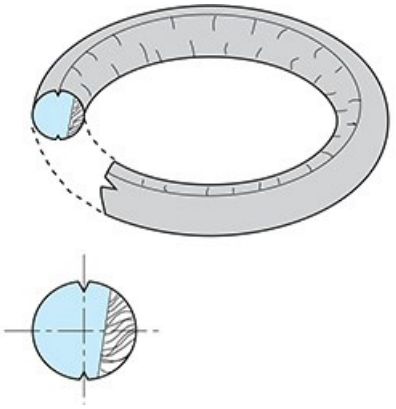
Explosion Explosion after decompression can occur when gases are present in the rubber under high pressures When the pressure drops, the gas trapped in the rubber expands. If the pressure is reduced gradually, the gas will leave the material in the normal way. If the pressure is reduced very quickly, the gas cannot leave in the normal manner and the rapid expansion of the gas may cause the material to explode.	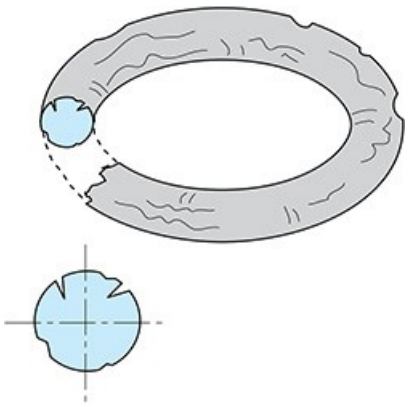

COPY COMPLIANT to the original document resident on the computer system at the time of printing

Installation damage If you do not use the correct tools to install an O-ring, your O-ring may become damaged when it is fitted. For example, the O-ring could catch on a sharp part, causing part of it to break off. This may result in a leakage path and cause leaks.	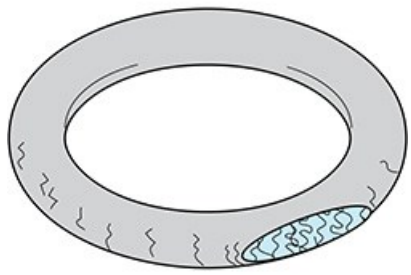

9. Extrusion

Especially for rod and piston seal, extrusion is a common failure. Three parameter defines if this damage will occur or not:

- pressure;
- clearance gap;
- O-ring hardness.

To prevent this problem, the adoption of anti-extrusion ring is recommended.

Table 4 Extrusion.

zero pressure installation	low pressure	high pressure extrusion	Failure
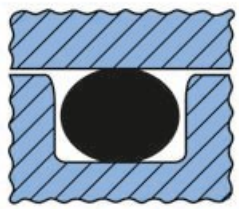	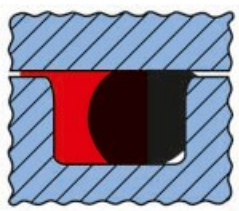	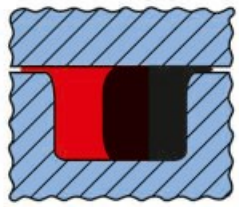	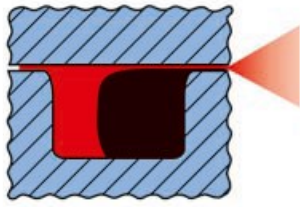

Usually, manufacturers provide a chart with the maximum allowable total diametral clearance[1], that are required to prevent extrusion in the absence of anti-extrusion ring for different hardness (a special module called *Mod.482 O-Ring.xlsm*, based on Parker datasheet in Figure 3, is available).

[1] Radial Clearance if concentricity between piston and cylinder is rigidly maintained.

COPY COMPLIANT to the original document resident on the computer system at the time of printing

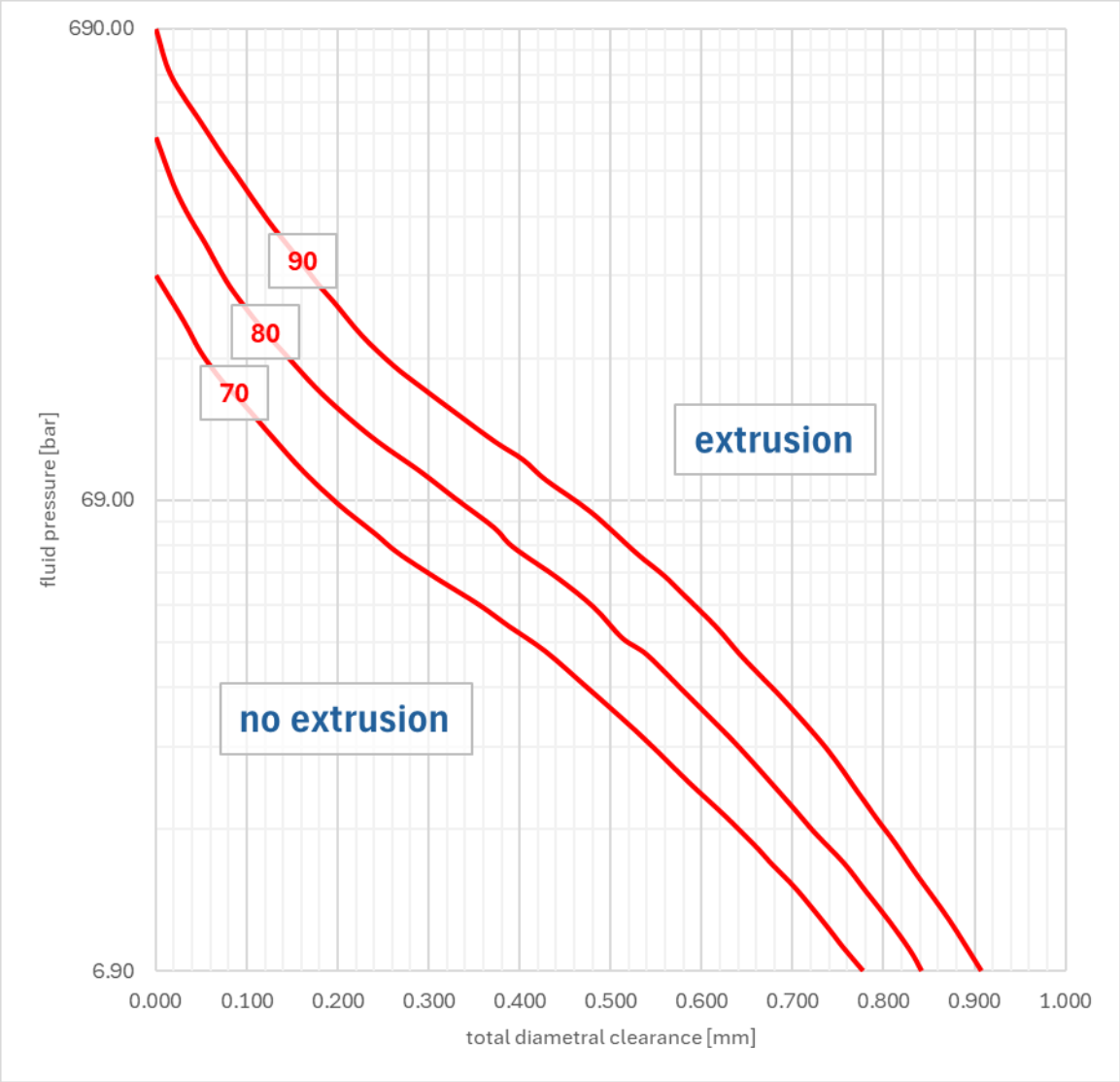

Figure 3 Limits for extrusion.

The basis for these curves is:

1. 100000 pressure cycles at the rate of 60 per minute from zero to the indicated pressure;
2. maximum temperature (i.e. test temperature) 71°C (160°F);
3. no back-up rings;
4. total diametral clearance c_{diam} must include cylinder expansion due to pressure;
5. it is necessary to apply a reasonable safety factor in practical applications to allow for excessively sharp edges and other imperfections and for higher temperatures;
6. when using silicone or fluorosilicone elastomers, it is required to reduce the clearance shown by 60%;
7. the values in the chart are assimilable to radial clearance for rod/piston seal if concentricity between piston and cylinder is rigidly maintained.

COPY COMPLIANT to the original document resident on the computer system at the time of printing

In case of high operating pressure, a detailed calculation of operating gap (e.g., with a FEA model) is necessary. The calculated gap must be compared with the charted limits in operating conditions (pressure, temperature, etc…) in Figure 3. If the gap is greater than tabulated values, an anti-extrusion ring is required (Figure 4 and Figure 5). Gland width b must be redefined in accordance with gland fill limits.

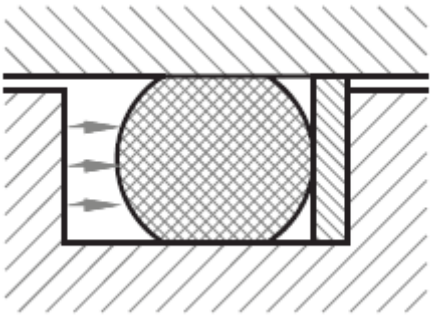

Figure 4 Pressure on one side.

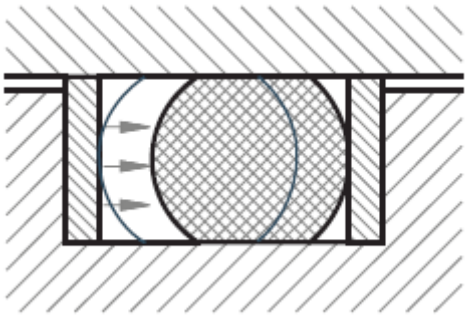

Figure 5 Pressure on both sides.

Axial seal nominally should have a zero gap at nominal conditions, but when internal pressure is applied, the distance between the flanges can increase and reach value comparable to allowable value of Figure 3. The previous considerations are still valid for this configuration.

COPY COMPLIANT to the original document resident on the computer system at the time of printing

10. Compression set

Compression set allows to quantify the certain degree of permanent deformation of the O-ring after compression during assembly (Figure 6).

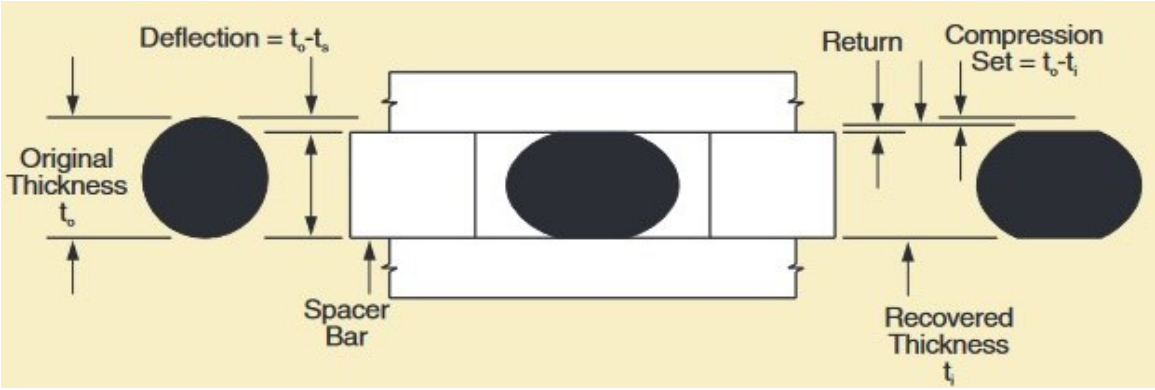

Figure 6 Compression set.

$$C = \frac{t_0 - t_i}{t_0 - t_s}$$

To evaluate the sealing properties, it is necessary to know the compression set of the selected material from manufacturers; using this data, it is possible to calculate the return.

Internal pressure usually causes an increment in the gap defined during design phase and O-ring must be capable to compensate deformations and guarantee the absence of leakage[2].

For high level pressure design, an accurate FEM analysis that evaluates the clearances at O-ring positions with operating and hydrotest conditions is highly recommended.

If the increment in the O-ring gap is higher than the return calculated, sealing is not guaranteed. It is recommended the adoption of an adequate safety factor for the required return evaluable with previous formula.

A special module called *Mod.482 O-ring.xlsm* is available to calculate the return on the basis of compression set, O-ring and gland dimensions.

[2] To simplify the assessment of this paragraph, the change of volume due to swell and the deformation of the O-ring cause d the pressure (Figure 2) are not considered.

COPY COMPLIANT to the original document resident on the computer system at the time of printing

11. High temperature limit effect

All elastomers are subject to deterioration due to high temperature. Volume change and compression set are both greatly influenced by heat. Hardness is influenced in a rather complex way. The first effect of increased temperature is to soften the compound. This is a physical change and will reverse when the temperature drops. However, it must be considered in high pressure applications because a compound that is sufficiently hard to resist extrusion at room temperature may begin to flow and extrude through the clearance gap as the temperature rises, due to this softening effect.

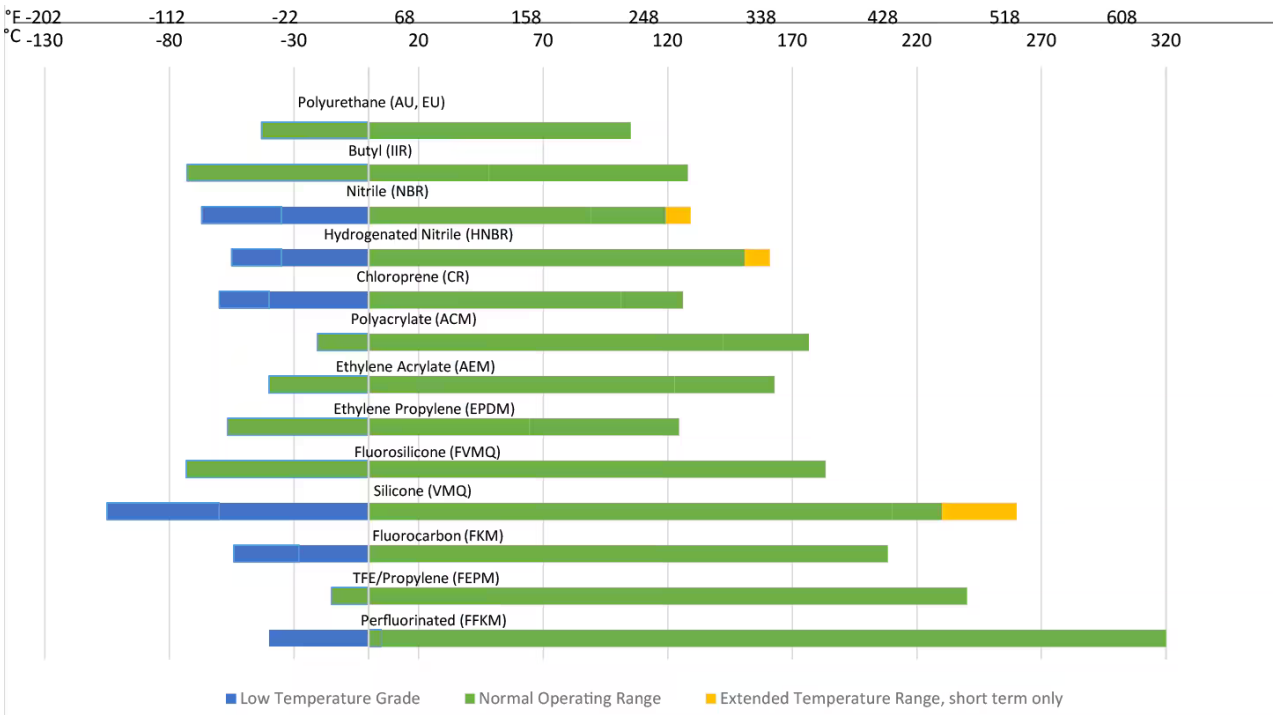

Figure 7 Temperature range for common elastomeric material.

With increasing time at high temperature, chemical changes slowly occur. These generally cause an increase in hardness, along with volume and compression set changes as mentioned above. Changes in tensile strength and elongation are also involved. Being chemical in nature, these changes are not reversible.

Figure 7 shows a realistic temperature range with a margin of safety when setting the general operating temperature range for seal compounds. The maximum temperature recommendation for a compound is based on long term functional service. If it is subjected to this temperature continuously, it should perform reliably for 1000 hours. Time at less than maximum temperature will extend life. Similarly, higher temperature will reduce it.

COPY COMPLIANT to the original document resident on the computer system at the time of printing

The high temperature limits assigned to compounds in Figure 7are conservative estimates of the maximum temperature for 1000 hours of continuous service in the media the compounds are most often used to seal. Since the top limit for any compound varies with the medium, the high temperature limit for many compounds is shown as a range rather than a single figure. This range may be reduced or extended in unusual fluids.

Since some fluids decompose at a temperature lower, then the maximum temperature limit of the elastomer, the temperature limits of both the seal and the fluid must be considered in determining limits for a system.

As a general rule above 320°C elastomeric O-ring shall not be used for continuous operation and it is necessary to select metallic gasket.

COPY COMPLIANT to the original document resident on the computer system at the time of printing

12. Acceptance criteria

12.1. Piston seal (low pressure).

Piston seal	
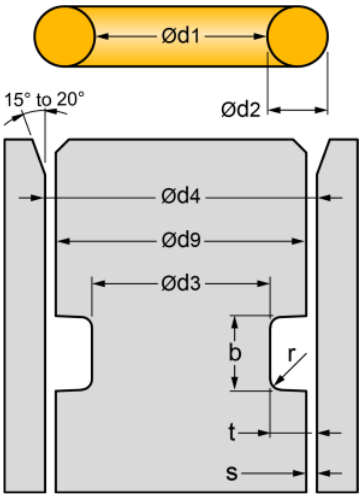	1. Verify fluid compatibility. 2. Define temperature range. 3. Define maximum pressure. 4. Select O-ring material. 5. Define d_1 and d_2. 6. Calculate t, s, b, r, d_3, d_4 and d_9 using following criteria: a. $\frac{d_3-d_1}{d_3} \in [0\%; 6\%]\ (stretch)$ b. $\frac{d_2-(t+s)}{d_2} \in [12\%; 28\%]\ (compression)$ c. $\frac{V_{Oring}}{V_{gland}} \in [60\%; 90\%]\ (gland\ fill)$ d. $F_{compression} < F_{assembly}\ (compression\ force)$ 7. Calculate from Figure 3 the limits for extrusion c_{ex} 8. If $2s < c_{diam}$ anti-extrusion ring is not required (if concentricity between piston and cylinder is rigidly maintained, consider $s < c_{diam}$). NOTE: thermal expansion of both gland and O-ring and gasket swelling must be considered in all the verifications. An example of dimensioning is presented in Annex B: O-ring selector (piston seal)

COPY COMPLIANT to the original document resident on the computer system at the time of printing

12.2. Rod seal (low pressure)

Rod seal	
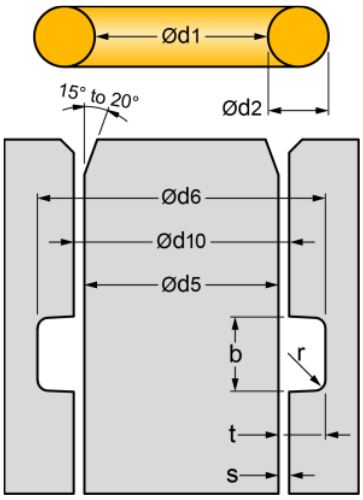	1. Verify fluid compatibility. 2. Define temperature range. 3. Define maximum pressure. 4. Select O-ring material. 5. Define d_1 and d_2. 6. Calculate t, s, b, r, d_5, d_6 and d_{10} using following criteria: a. $\frac{d_6-d_1-2d_2}{d_6} \in [0\%; 3\%]\ (interference)$ b. $\frac{d_1}{d_5} \in [0\%; 6\%]\ (stretch)$ c. $\frac{d_2-(t+s)}{d_2} \in [15\%; 21\%]\ (compression)$ d. $\frac{V_{Oring}}{V_{gland}} \in [60\%; 90\%]\ (gland\ fill)$ e. $F_{compression} < F_{assembly}\ (compression\ force)$ 7. Calculate from Figure 3 the limits for extrusion c_{ex} Calculate 8. If $2s < c_{diam}$ anti-extrusion ring is not required (if concentricity between piston and cylinder is rigidly maintained, consider $s < c_{diam}$). NOTE: thermal expansion of both gland and O-ring and gasket swelling must be considered in all the verifications. An example of dimensioning is presented in Annex C: O-ring selector (rod seal)

COPY COMPLIANT to the original document resident on the computer system at the time of printing

12.3. Axial seal (low pressure)

Axial seal	
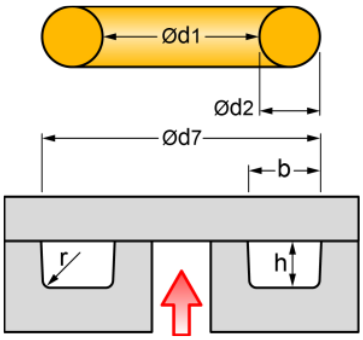	1. Verify fluid compatibility. 2. Define temperature range. 3. Define maximum pressure. 4. Select O-ring material. 5. Define d_1 and d_2. 6. Calculate h, b, r and d_7 using following criteria: a. $\frac{d_7-d_1-2d_2}{d_7} \in [0\%; 3\%]\ (interference)$ b. $\frac{d_2-h}{d_2} \in [21\%; 30\%]\ (compression)$ c. $\frac{V_{Oring}}{V_{gland}} \in [60\%; 90\%]\ (gland\ fill)$ d. $F_{compression} < F_{assembly}\ (compression\ force)$ 7. Calculate from Figure 3 the limits for extrusion c_{ex} Calculate 8. If $s < c_{diam}$ anti-extrusion ring is not required. NOTE: thermal expansion of both gland and O-ring and gasket swelling must be considered in all the verifications. An example of dimensioning is presented in Annex D: O-ring selector (axial seal)

COPY COMPLIANT to the original document resident on the computer system at the time of printing

12.1. Piston, rod, axial seal (high pressure)

In case of connection with O-ring subjected to pressure level that can cause significative deformation and variations of the clearance entity in operating conditions, in addition to previous evaluation it is necessary to calculate the level of separation at gasket location. A FEM model capable to describe contact conditions in sealed position is appropriate.

For very demanding applications a numerical model of O-ring is strongly suggested, while for more common applications the O-ring can be neglected and clearances at gland locations must be calculated for both operative (c_{op}) and hydrotest (c_h) conditions (gland modelling can be omitted).

The procedure to verify the absence of leakage is:

- determine the O-ring compression set C from manufacturer data;
- calculate recoved thickness t_i with the formula in §10;
- calculate return $t_i - t_s$
- define a factor of safety FS (Table 5);
- verify $\frac{t_i - t_s}{c_{op}} > FS$;
- verify $\frac{t_i - t_s}{c_h} > FS$;
- for axial seal, piston and rod seal with concentricity between piston and cylinder guaranteed[3], if maximum calculated $c_{op} < c_{diam}$, anti-extrusion ring is not required.

The block diagram of the complete procedure is presented in Annex A: Block diagram

Table 5 Factor of safety.

	Piston seal	Rode Seal	Axial seal
FS	*1.50*	*1.50*	*1.60*

[3] If concentricity is not guaranteed, c_{diam} must be compared with the sum of the radial clearance of calculated at diametrically opposite positions:

$$(c_{op})_\theta + (c_{op})_{\theta+\pi} < c_{diam} \Rightarrow antiextrusion\ ring\ is\ not\ required$$

COPY COMPLIANT to the original document resident on the computer system at the time of printing

13. References

- *Parker O-Ring Handbook Ord 5700*
- *Mod.482 – O-ring.*

COPY COMPLIANT to the original document resident on the computer system at the time of printing

14. Annex A: Block diagram

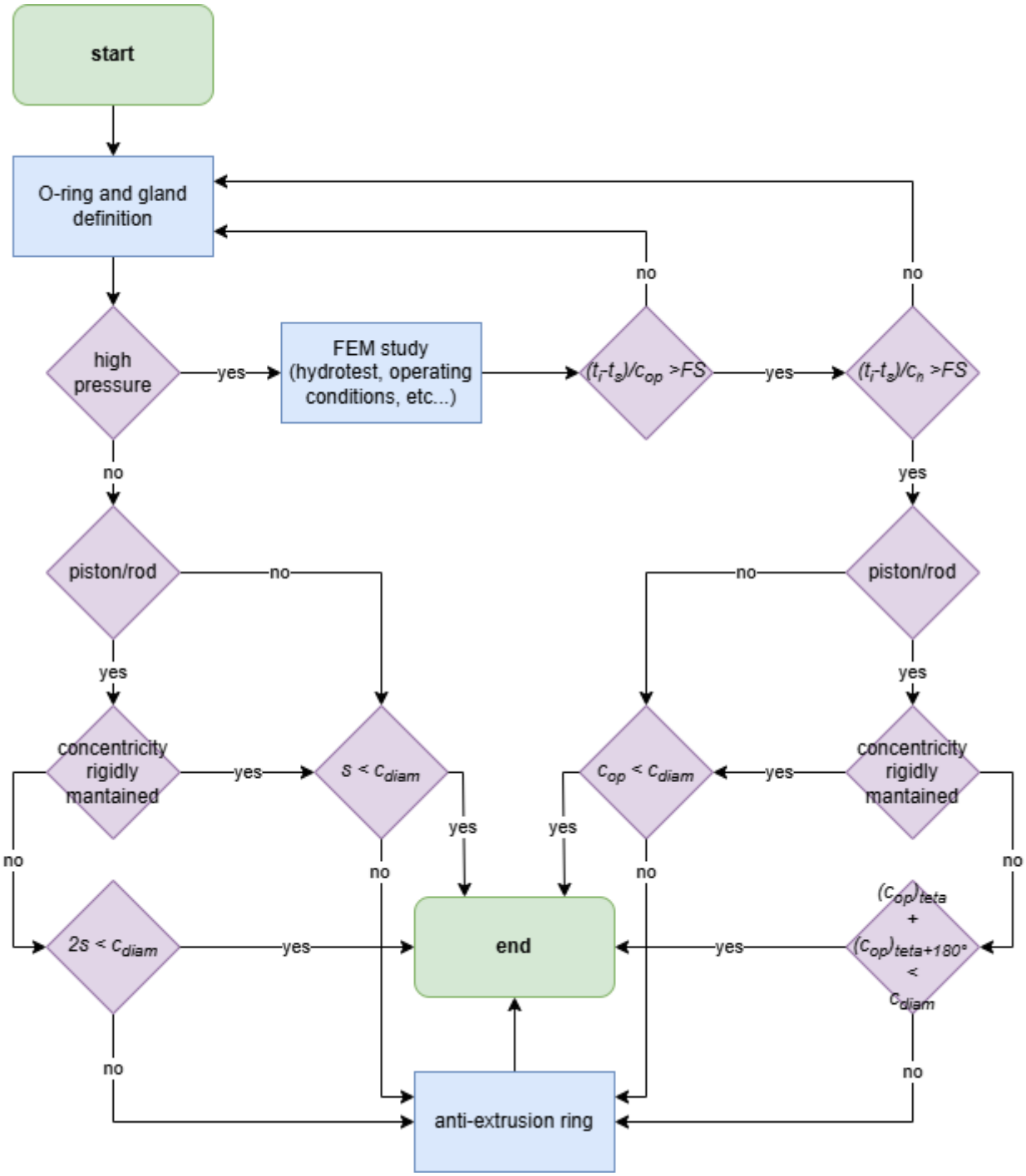

COPY COMPLIANT to the original document resident on the computer system at the time of printing

15. Annex B: O-ring selector (piston seal)

O-Ring Selector

Region: International Unit: mm

Service Conditions & Defining Attributes

Operating Temperature	Minimum: 100°C Maximum: 120°C
Polymer Group	Ethylene Propylene Rubber (EPM, EPR, EPDM)
Seal Hardness	90 SHA
Compound	

O-ring Size Code

Hardware Configuration

Sealing Case	Radial - Piston Seal
Application	Static

Thermal Expansion & Volume Swelling

Seal	Group default	160×10^{-6} / K
Piston / Groove	Iron / Steel	12×10^{-6} / K
Bore	Iron / Steel	12×10^{-6} / K
Seal max. volume swell		0 %

Sizing Selection

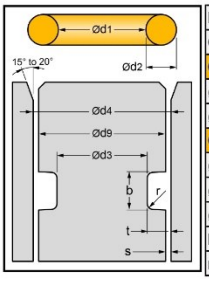

Back-up Rings			Amount : 0		Width : mm		
O-ring Size Code			2-345				
OR		**Nominal**	**Tolerance**	**Limit**	**Min**	**Max**	
ød1	Inner diameter	100.970	ISO 3601-1 B ±	0.830	100.140	101.800	mm
ød2	Cross section	5.330	ISO 3601-1 B ±	0.130	5.200	5.460	mm
Groove		**Nominal**	**Lower**	**Upper**	**Min**	**Max**	
ød4	Bore	111.900	0.000	0.054	111.900	111.954	mm
ød9	Piston	111.900	-0.071	-0.036	111.829	111.864	mm
ød3	Groove	103.900	-0.087	0.000	103.813	103.900	mm
b	Width	7.200	0.000	0.200	7.200	7.400	mm
r	Radius	0.600	-0.200	0.200	0.400	0.800	mm

Results

Recommended Warning Critical

Results	Recommendation	Concentric		Eccentric		
		Min	Max	Min	Max	
t Depth + gap		4.004	4.075	3.968	4.138	mm
s gap		0.018	0.063		0.125	mm
Stretch of OR inner-ø	0...6	2.0	3.8			%
Compression of OR ød2	12...28	21.0	27.4	19.7	28.0	%
Gland fill	60...90	71.4	85.1			%
Total deformation force		3185	5574			N

Notes

Recommendations on application design and material selection are based on available technical data and are offered as suggestions only. Each user should make his own tests to determine the suitability for his own particular use. Parker offers no express or implied warranties concerning the form, fit, or function of a product in any application.

Contact the US Application Engineers phone: 859-335-5101 email: OESmailbox@parker.com
Contact the European Application Engineers phone: +49 7142 351-0 email: praedifa@parker.com

COPY COMPLIANT to the original document resident on the computer system at the time of printing

16. Annex C: O-ring selector (rod seal)

O-Ring Selector

Region: International Unit: mm

Service Conditions & Defining Attributes

Operating Temperature	Minimum: 90°C Maximum: 120°C
Polymer Group	Ethylene Propylene Rubber (EPM, EPR, EPDM)
Seal Hardness	80 SHA
Compound	

O-ring Size Code

Hardware Configuration

Sealing Case	Radial - Rod Seal
Application	Static

Thermal Expansion & Volume Swelling

Seal	Group default	160×10^{-6} / K
Rod	Stainless steel	17×10^{-6} / K
Bore / Groove	Stainless steel	17×10^{-6} / K
Seal max. volume swell		0 %

Sizing Selection

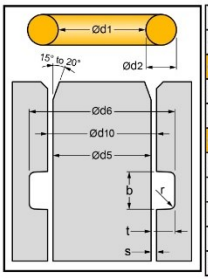

Back-up Rings			Amount : 0		Width : mm		
O-ring Size Code			2-345				
OR		**Nominal**	**Tolerance**	**Limit**	**Min**	**Max**	
ød1	Inner diameter	100.970	ISO 3601-1 B ±	0.830	100.140	101.800	mm
ød2	Cross section	5.330	ISO 3601-1 B ±	0.130	5.200	5.460	mm
Groove		**Nominal**	**Lower**	**Upper**	**Min**	**Max**	
ød6	Groove	110.500	0.000	0.087	110.500	110.587	mm
ød10	Bore	102.800	0.000	0.054	102.800	102.854	mm
ød5	Rod	102.800	-0.071	-0.036	102.729	102.764	mm
b	Width	7.200	0.000	0.200	7.200	7.400	mm
r	Radius	0.600	-0.200	0.200	0.400	0.800	mm

Results

Recommended Warning Critical

Results	Recommendation	Concentric		Eccentric		
		Min	Max	Min	Max	
t Depth + gap		3.872	3.936	3.827	3.998	mm
s gap		0.018	0.063		0.125	mm
Interference of OR outer-ø	0...3		2.0			mm
Stretch of OR inner-ø	0...6	0.9	2.6			%
Compression of OR ød2	12...28	24.0	30.1	22.8	30.9	%
Gland fill	60...90	74.4	89.0			%
Total deformation force		2438	0			N

Notes

Recommendations on application design and material selection are based on available technical data and are offered as suggestions only. Each user should make his own tests to determine the suitability for his own particular use. Parker offers no express or implied warranties concerning the form, fit, or function of a product in any application.

Contact the US Application Engineers phone: 859-335-5101 email: OESmailbox@parker.com
Contact the European Application Engineers phone: +49 7142 351-0 email: praedifa@parker.com

COPY COMPLIANT to the original document resident on the computer system at the time of printing

17. Annex D: O-ring selector (axial seal)

O-Ring Selector

Region: International Unit: mm

Service Conditions & Defining Attributes

Operating Temperature	Minimum: 90°C Maximum: 120°C
Polymer Group	Ethylene Propylene Rubber (EPM, EPR, EPDM)
Seal Hardness	90 SHA
Compound	

O-ring Size Code

Hardware Configuration

Sealing Case	Axial - Internal Pressure
Application	Liquid

Thermal Expansion & Volume Swelling

Seal	Group default	160×10^{-6} / K
Groove	Stainless steel	17×10^{-6} / K
Seal max. volume swell		0 %

Sizing Selection

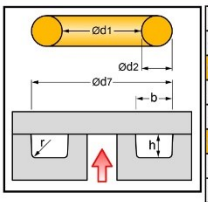

Back-up Rings			Amount : 0		Width : mm		
O-ring Size Code			2-340				
OR		**Nominal**	**Tolerance**	**Limit**	**Min**	**Max**	
ød1	Inner diameter	85.090	ISO 3601-1 B ±	0.720	84.370	85.810	mm
ød2	Cross section	5.330	ISO 3601-1 B ±	0.130	5.200	5.460	mm
Groove		**Nominal**	**Lower**	**Upper**	**Min**	**Max**	
ød7	Outer Diameter	95.760	0.000	0.087	95.760	95.847	mm
b	Width	7.600	0.000	0.200	7.600	7.800	mm
h	Depth	4.200	0.000	0.100	4.200	4.300	mm
r	Radius	0.600	-0.200	0.200	0.400	0.800	mm

Results

Recommended Warning Critical

Results	Recommendation	Min	Max	
Interference of OR outer-ø	0...3	(-1.1)	1.0	%
Compression of OR ød2	15...23	18.0	24.0	%
Gland fill	60...90	66.4	79.8	%
Total deformation force		2073	3717	N

Notes

Recommendations on application design and material selection are based on available technical data and are offered as suggestions only. Each user should make his own tests to determine the suitability for his own particular use. Parker offers no express or implied warranties concerning the form, fit, or function of a product in any application.

Contact the US Application Engineers phone: 859-335-5101 email: OESmailbox@parker.com
Contact the European Application Engineers phone: +49 7142 351-0 email: praedifa@parker.com

COPY COMPLIANT to the original document resident on the computer system at the time of printing

18. Annex E: Case study

18.1. Introduction

During hydrotest, nominally at 217.5 bar, the 086828 V6 vertical barrel pump shows sensible leakage. A redesign of flanges, bolting and gasket is required. The Table 6 shows the main differences between the original design and the improved one.

Table 6 Case study comparison.

	Original design	Improved design
Upper flange thickness	55 mm	55 mm
Lower flange thickness	40 mm	40 mm
Sealing type	spiral would gasket	O-ring
Bolting	24 M42x3 Alloy 625[4]	22 M42x3 A193B7 2 super bolt M42x3 (high strength)

[4] In the original design it is difficult to reach the correct tightening force for two bolts placed near the suction flange.

COPY COMPLIANT to the original document resident on the computer system at the time of printing

18.1. Numerical results

A FEA analysis is performed to analyse both configurations. For the original design the nominal pressure is not achievable (maximum simulated pressure equal to 174 bar).

	$\sigma_{eq}/\sigma_{yield}$ [-]
Original (174 bar)	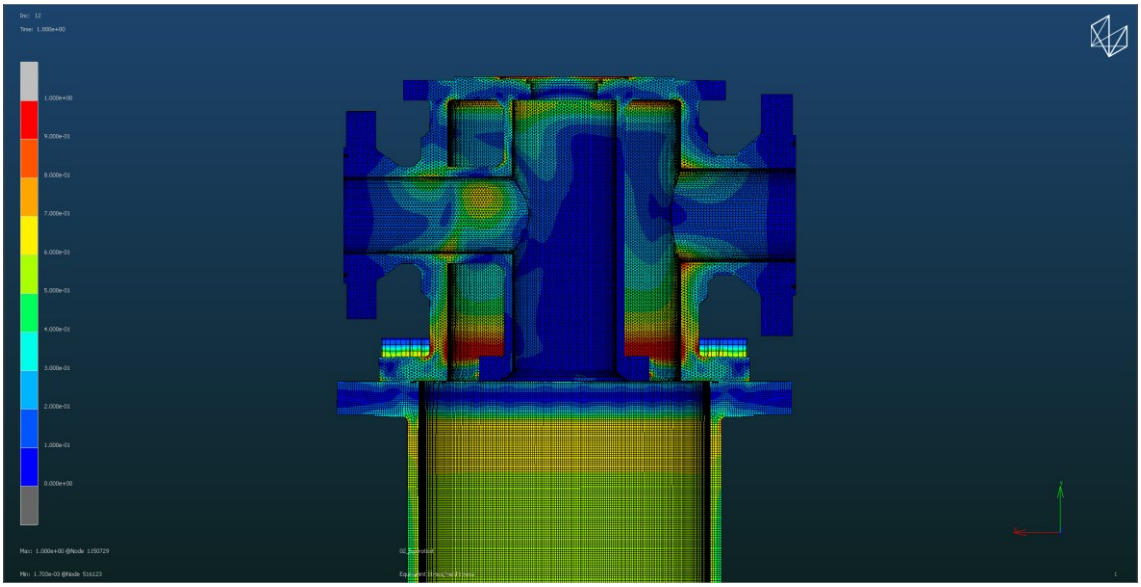
Improved (217.5 bar)	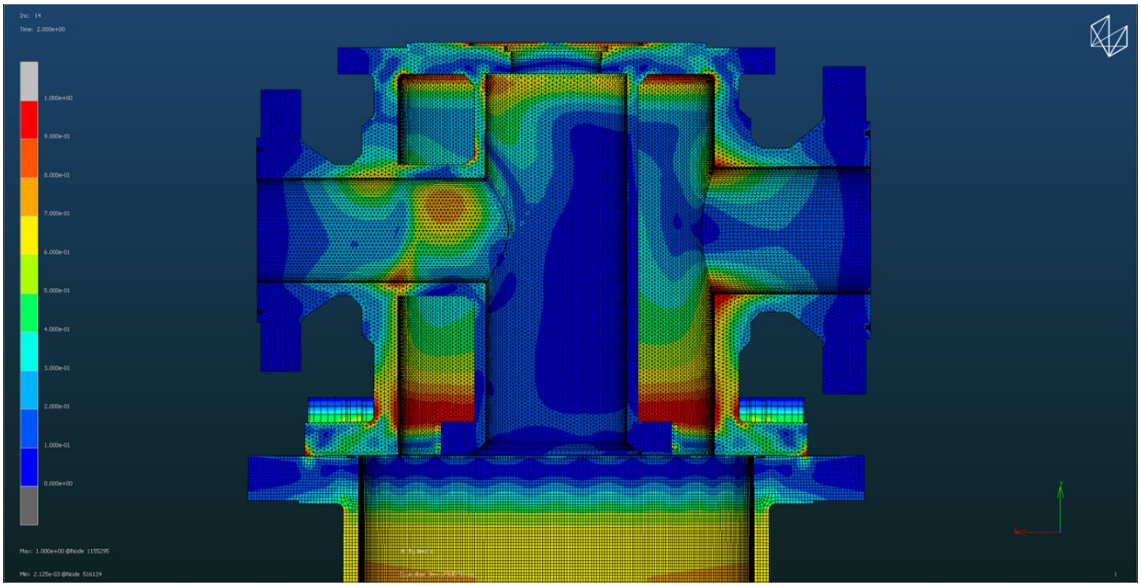

COPY COMPLIANT to the original document resident on the computer system at the time of printing

Separation [mm]

Original (174 bar)

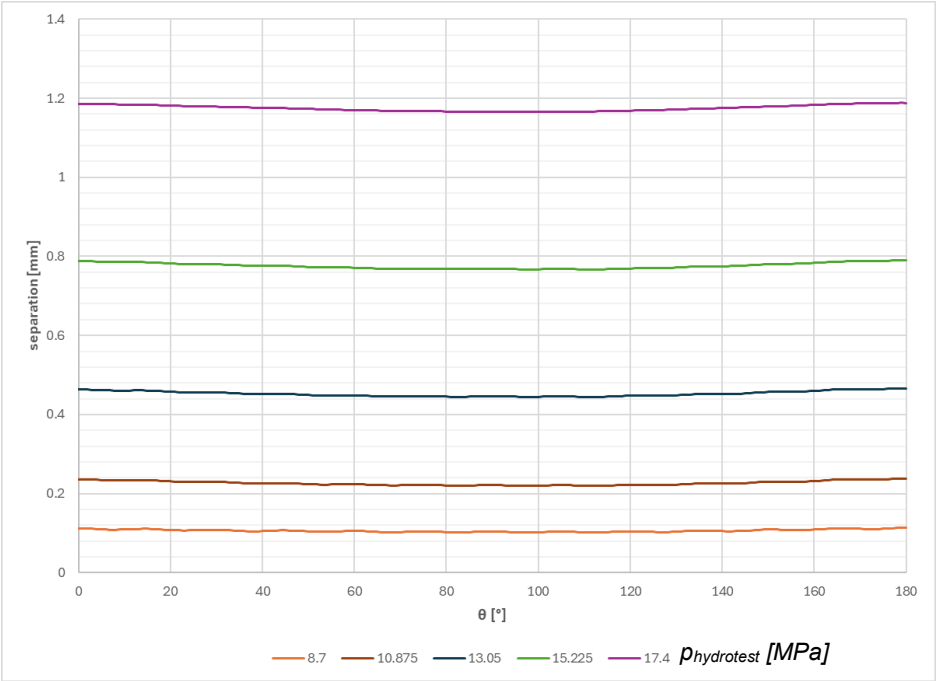

Improved (217.5 bar)

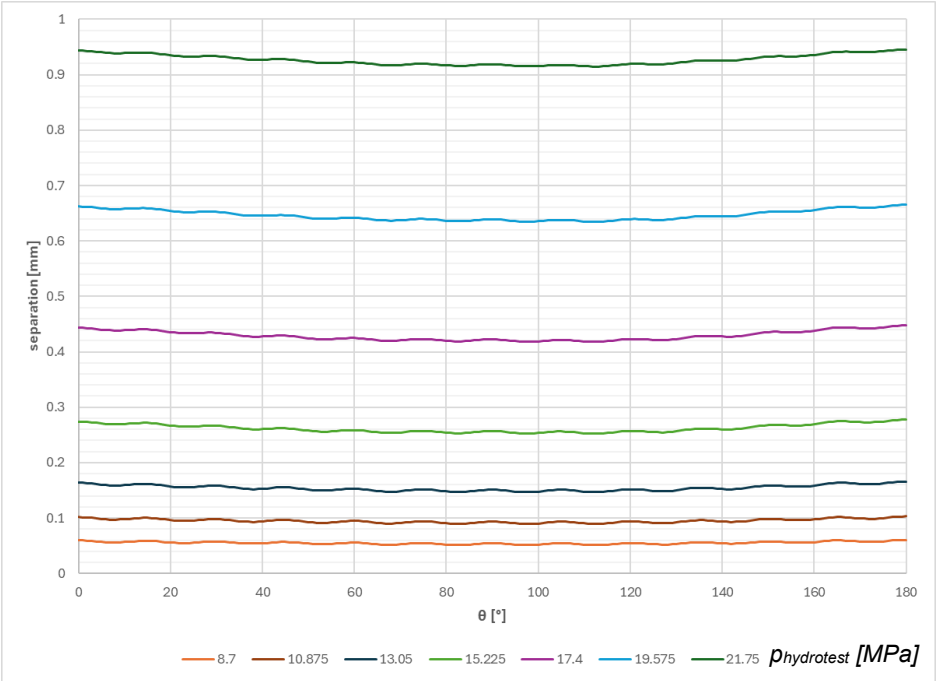

COPY COMPLIANT to the original document resident on the computer system at the time of printing

18.2. Experimental test

The improved design has a new gland design (Figure 8), an *O-RING FKM, Peroxide curable, 90 Shore A, AED, for low temperatures (-45°C + 220°C), TR 10-40°C* with d_1=6.99 mm, anti-extrusion ring in PTFE+25% glass fiber and two superbolts placed below the suction flange (Figure 9).

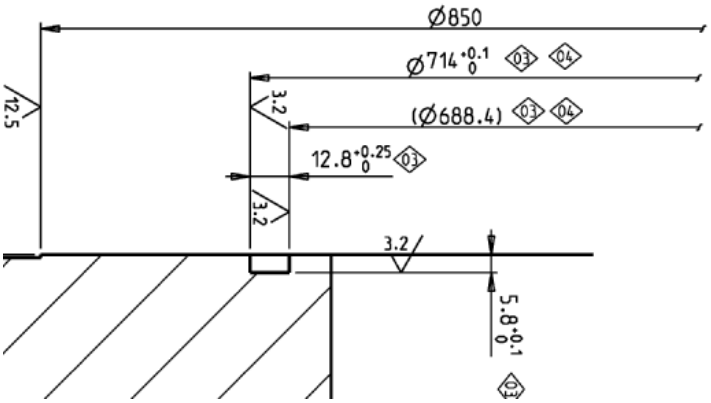

Figure 8 Gland design.

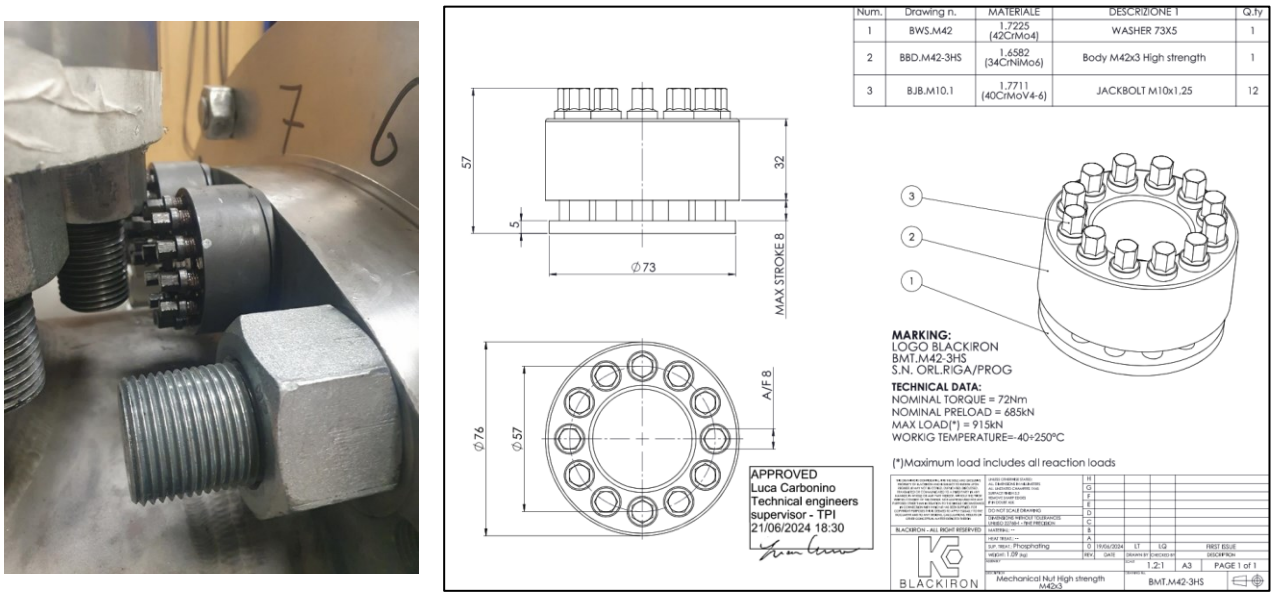

Figure 9 Superbolts.

During hydrotest at 180 bar no leakage is measured, while at an internal pressure equal to 190 bar a not negligible leakage is present.

COPY COMPLIANT to the original document resident on the computer system at the time of printing

18.3. Conclusions

Assuming for the compression set a value of 20%, O-ring theorical deflection is 1.19 mm, recovered thickness t_i=6.752 mm and return is 0.952 mm.

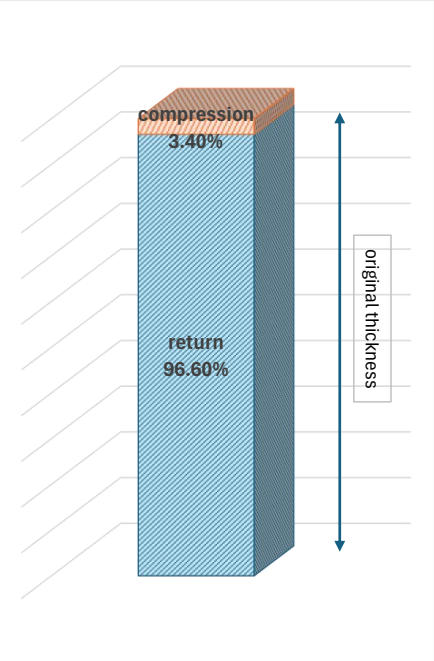

Compression set		
C [-]	20%	(compression set as percent of original deflection)
t_0 [mm]	6.99	(original thickness)
t_s [mm]	5.8	(compressed thickness/gland depth)
t_0-t_s [mm]	1.19	(deflection)
t_i [mm]	6.752	(recovered thickness)
t_i-t_s [mm]	0.952	(return)
seal type	axial	(type of seal)
c_{op} [mm]	0.45	(calculated clearance - operating conditions)
c_h [mm]	0.69	(calculated clearance - hydrotest)
FS	1.6	(factor of safety)
(t_i-t_s)/c_{op} [-]	2.12	(recovered thickness verification - operating conditions)
(t_i-t_s)/c_h [-]	1.38	(recovered thickness verification - hydrotest)

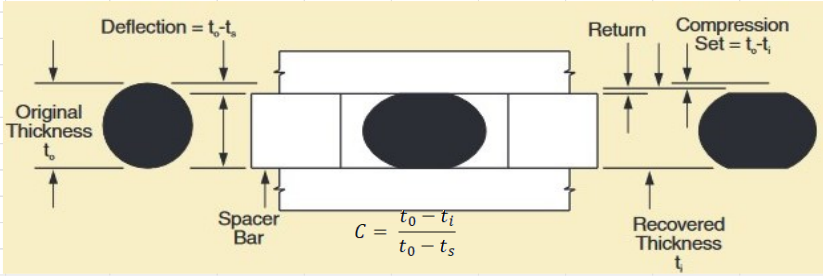

Figure 10 Recovered thickness.

From numerical model maximum separation for improved version:

$c_{180\ bar} \cong 0.45\ mm$ (no leakage)

$c_{190\ bar} \cong 0.69\ mm$ (start of leakage)

Using formula in §12.1:

$$\frac{t_i - t_s}{c_{180\ bar}} = 2.12 > FS = 1.6 \Longrightarrow ok$$

$$\frac{t_i - t_s}{c_{190\ bar}} = 1.38 < FS = 1.6 \Longrightarrow not\ ok$$

COPY COMPLIANT to the original document resident on the computer system at the time of printing